KWC GASTRO
Commercial kitchen - Vertical shut-off valve

Modell-Linie: GASTRO | K.24.40.60.000C34
Taps | Manual taps

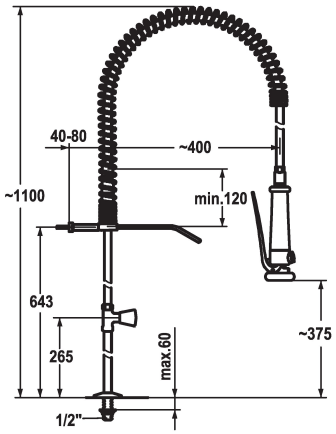

KWC-No.

100960
chromeline

* Vertical shut-off valve
* Suspension spring
* KWC CORONA metal handle, removable (cold water)
* TouchProtect - anti-scald protection thanks to the “double skin” principle
* Pre-rinse spray
- with integrated delayed closing device to minimize water hammer with valve maintenance unit for cleaning
- SprayClean - easy to clean and actively prevents limescale

buildup
- SprayLock - lockable jet spray
- PowerClean - needle spray mode
* OptimalSpace - ample space for washing or working
* Flat valves M20 x 1.25
- stainless steel valve seat
* Connecting thread ½"
* Mounting hole size ø22 mm

Technical Data
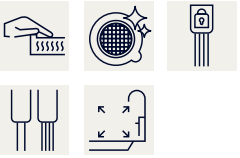
Spray: Flow rate	15 l/min (3 bar)
Connection	G 1/2"
Kitchen_spray	Pre-rinse spray
Color code	chrome
Installation_type	Pillar installation
Faucet_typ	G 3/8"1
Dimension Height	1100
Acoustic group	Battery1
Projection_A	A 400
Dimension Water outlet	375
material	Brass