KWC ONO touch light PRO

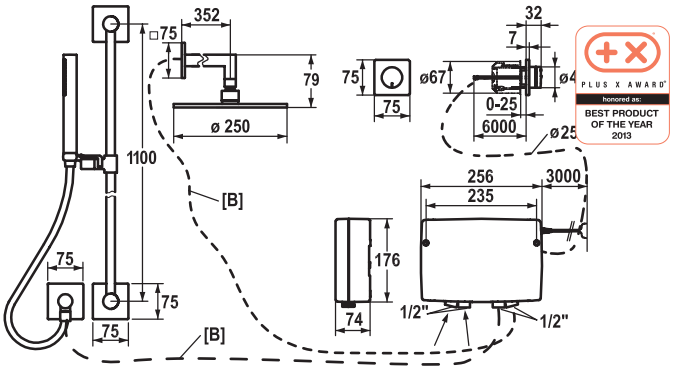

KWC-No.	Finish
21.654.020.000	all chrome

L 1100, power supply for concealed installation, with hand shower and hose, Trim kit

Shower
Thermostatic mixer

IntelligentControl - electronic control
- touch light PRO technology

- touch'n'flow 1-2-3
- 3 preset temperatures and flow rates
- Microprocessor-control
  - touch'n'flow 1: 12°C, 80% flow rate can be individually adjusted and saved
  - touch'n'flow 2: 25°C, 80% flow rate can be individually adjusted and saved
  - touch'n'flow 3: 38°C, 80% flow rate can be individually adjusted and saved
  - temperatures above 40°C cannot be saved due to EU regulations
  - with cleaning programme
  - duration of water flow - safety indication: switch off automatically after 45 minutes
  - switching between two outlets possible (hand shower/shower head)
  - overrule of the 40°C limit possible
  - if the temperature falls below 37°C, the 40°C limit is reactivated
  - hot water disinfection (5 minutes) can be adjusted
  - can be restored to factory settings
- touch light PRO control unit, maintenance-free
  - up-to-date microprocessor and drive technology
  - tried-and-tested valve technology
  - incl. installation materials
  - designed for wired connection to 1 operating unit (standard) , wireless connection to 1 operating unit (optional)
- Connecting thread ½"
  - [B] - Water guidance from control unit to hand shower and shower head: responsibility of client
- Scope of delivery:
  - Hand shower
  - Control unit and wired operating unit / cable length 6000 mm
  - power supply 100-240 V (without plug / operating voltage 15 V / cable length 3000 mm
  - Shower head
  - Hose connection design
  - KWC sliding wall bar FIT "The original"
- To be ordered separately:
  - Rough in for operating unit Z.636.183
- To be ordered separately (optional or if necessary):
  - KWC ONO touch light PRO wireless operating unit Z.536.351.000
  - Installation and inspection box 39.000.510.931 Bypass for pressure testing and rinsing Z.536.405
- Go to www.kwc.com for comprehensive information on planning, installation and operation, or get in touch with your KWC contact person.

Spray outlet: Flow rate 19 l/min (3 bar)
Spray outlet: Acoustic group I