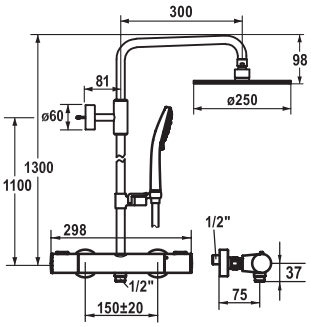

KWC-No.	Finish
26.006.313.000	all chrome

AD 150 +/- 20 mm, A 300, with hand shower and hose

Shower system
Thermostatic mixer

Shower system fit
- The water-bearing sliding wall bar can be shortened to any individual length as required
- Swiveling bracket, shower head with ball joint
- SkinProtect - Safety stop prevents scalding
- Turning handle to control flow and for diverter
- KWC ball joint bracket, elevation adjustment lockable
- Tube diameter 20 mm
- Intrinsically safe against backflow
- Easy to install on existing connections
- Thermostatic precision control unit
  - constant water temperature (even when mains pressure fluctuates)
  - fast response
- Wall connections ½" x ¾", without shut-off valve eccentric 10 mm
- Scope of delivery:
  - Thermostat incl. wall connections with outlet (top) for water-bearing sliding wall bar
  - Hand shower KWC FIT-X trio 26.000.119.000
  - Shower hose 1800 mm, plastic 26.001.014.000
  - Shower head KWC PIATTO -X R250 26.000.214.000
  - Sliding wall bar kit 26.004.003.000
  - Shower guide rod holder (top), for connecting guide rod and spray arm