KWC DOMO | 6.0

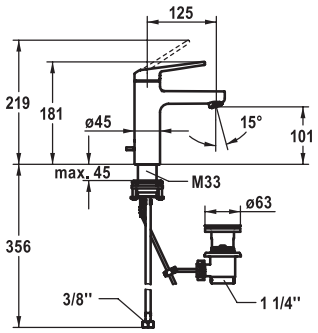

KWC-No.	Finish
12.668.041.000FL	all chrome
A 125, flexible connection hoses, with pop-up valve	
12.668.051.000FL	all chrome
A 125, flexible connection hoses, without pop-up valve	

Basin

Lever mixer
- EcoProtect - water-saving device
- Fixed spout
  – Neoperl® Cascade® SLC
- KWC cartridge M 35 OP
  – with ceramic discs
  – flow rate and temperature continuously variable
  – temperature limitation
- Flexible connection hoses ⅜"
- QuickInstallation - Fastening via threaded connection with locking screws
- Mounting hole size ø35 mm
- Scope of delivery:
  – KWC pop-up valve Z.538.581.000

Flow rate 4 l/min (3 bar)
Acoustic group I