KWC ERA

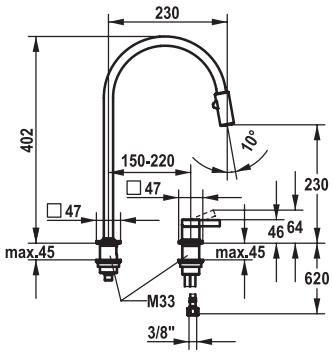

KWC-No.	Finish
10.392.323.700FL	stainless steel

A 230, flexible connection hoses

Kitchen

Lever mixer
- 2-hole
- Lever installation possible on the right or left side
- TouchProtect - anti-scald protection thanks to the "double skin" principle
- Pull-out spray 360° turn - magnetic tight-fit holder
  - SprayClean - easy to clean and actively prevents limescale buildup
  - Jet regulator
  - PowerClean - needle spray mode, with automatic diverter reset
  - up to 500 mm pull-out length
  - black fabric hose
- Hose guide, swivelling 150° or 360°
- OptimalSpace - ample space for washing or working
- KWC cartridge S 25
  - with ceramic discs
  - flow rate and temperature continuously variable
- Flexible connection hoses ⅜"
- Fastening by means of threaded sleeve M33 x 1.5
- Mounting hole size ø35 mm

Flow rate normal spray 7 l/min (3 bar)
Flow rate needle spray 7 l/min (3 bar)
Acoustic group I